# Omni antenna with IP67 protection

## IOX-MJN-V3UI

### Low PIM(-153dBc), 698-2700MHz, N-Female



- **Reliable Protection:** IP67 waterproof rating provides complete protection against dust and allows temporary immersion in water, ensuring consistent performance even in harsh, wet environments.
- **Wideband Performance:** Operates across 698–2700 MHz, covering multiple frequency bands
- **Versatile Deployment:** Fully sealed and engineered for both indoor and outdoor applications, ideal for industrial and public safety environments, including outdoor areas, parking garages, tunnels, and cold-storage facilities
- **Compact & Efficient:** Space-saving design with a cost-effective structure, making it easy to install in tight locations without compromising performance.
- **Safety Certified:** Built with UL-94-V0 compliant materials to meet strict flammability standards, ensuring safety and reliability in critical installations.

## *Electrical Specification*

| **Product Model** | | **IOX-MJN-V3UI** | |
|---|---|---|---|
| **Frequency (MHz)** | 698-806 | 806-960 | 1695-2700 |
| **Gain (dBi)** | 1.8 ± 0.5 | 2.0 ± 0.5 | 3.0 + 1.0 |
| **Polarization** | | Vertical | |
| **Beamwidth Horizontal (°)** | | 360 | |
| **Beamwidth Vertical(°)** | 90 | 70 | 35 |
| **VSWR** | ≤ 1.8. typical ≤ 1.5 | ≤ 1.5 | ≤ 1.5 |
| **PIM (dBc)** | | < -153 @ 2 x 43dBm | |
| **Average Power, max (W)** | | 50 | |
| **Impedance (ohm)** | | 50 | |

## *Mechanical Specification*

| | |
|---|---|
| **Dimension Diameter, height (in/mm)** | ∅ 8.4 x 4.6 / ∅ 213.0x 116.0 |
| **Weight (lb./kg)** | 1.10 / 0.50 |
| **Shipping Dimension(in/mm)** | 7.09x7.09x7.09 / 180.0x180.0x180.0 |
| **Shipping Weight(lb./kg)** | 1.65 /0.75 |
| **Radome Material & color** | ABS, White, RAL9003 |
| **Flammability** | UL-94-V0 |
| **Mounting/Connector type** | Ceil Mount,<br>Option1: Hard Ceiling mount bracket (MT-DA-01)<br>Option2: High Ceiling or Joist mount bracket (MT-ND-HC) |

## *Environment & Compliance*

| | |
|---|---|
| **Application** | Indoor/Outdoor |
| **Operating Temperature** | -40°C to +65°C |
| **Relative Humidity** | Up to 95% |
| **RoHS** | Compliant |
| **Environment** | IP67 |

## *Antenna Pattern*

Horizontal Vertical

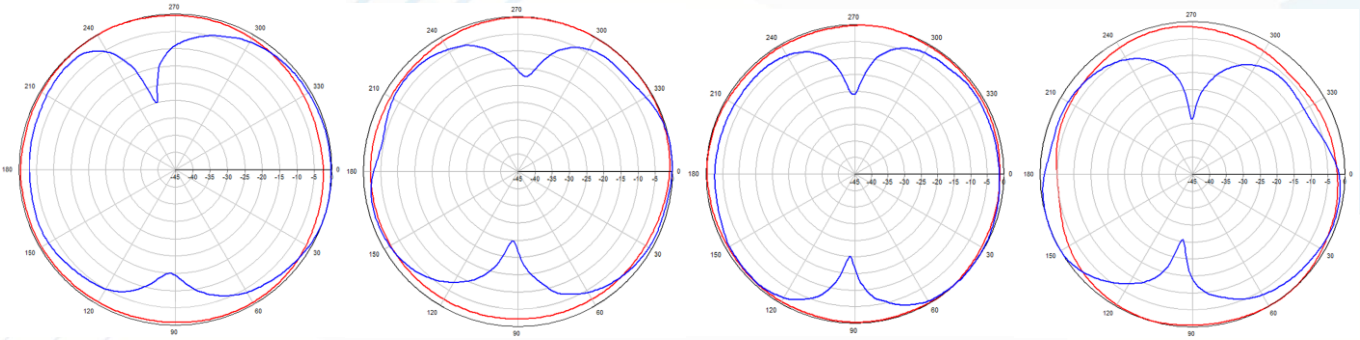

698MHz 806MHz 880MHz 960MHz

©2025 Comba Group. All rights reserved.
Information contained in this document is subject to confirmation at time of ordering.
Specifications may differ depending on region and customers' requirements.

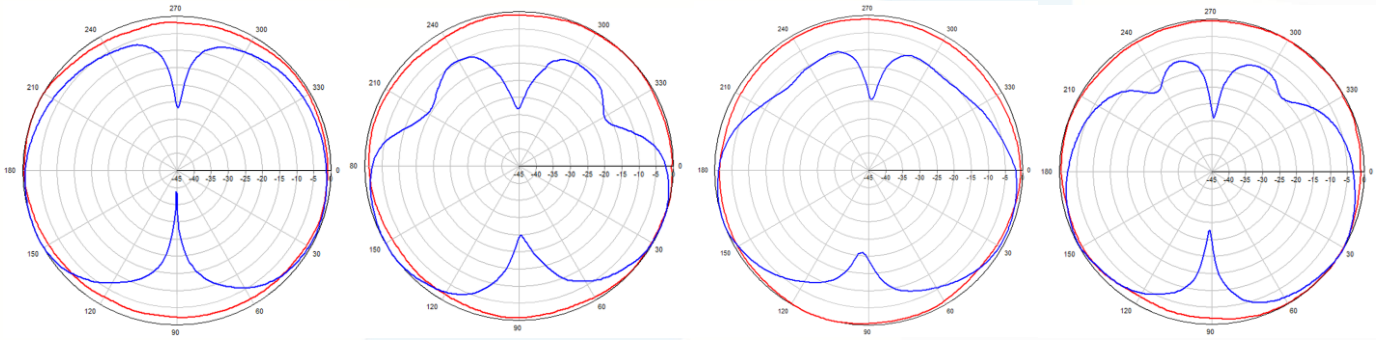

1710MHz 2170MHz 2300MHz 2700MHz

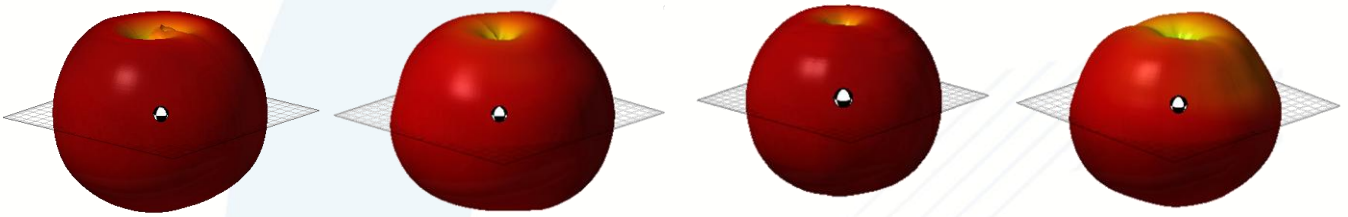

698MHz 806MHz 880MHz 960MHz

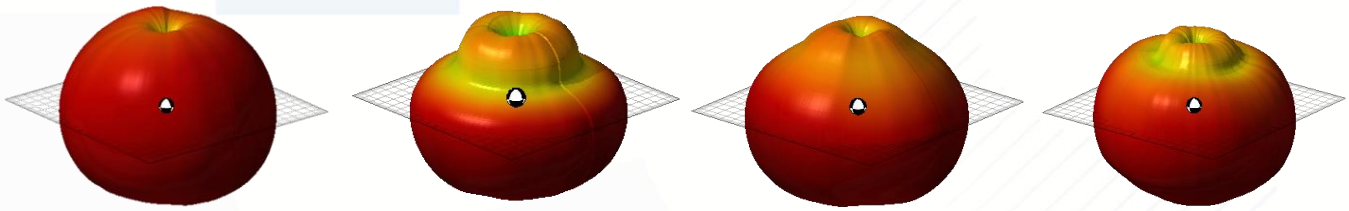

1710MHz 2170MHz 2300MHz 2700MHz

## *Outline Drawing & Installation Instruction*

1. Standard Ceiling Mounting

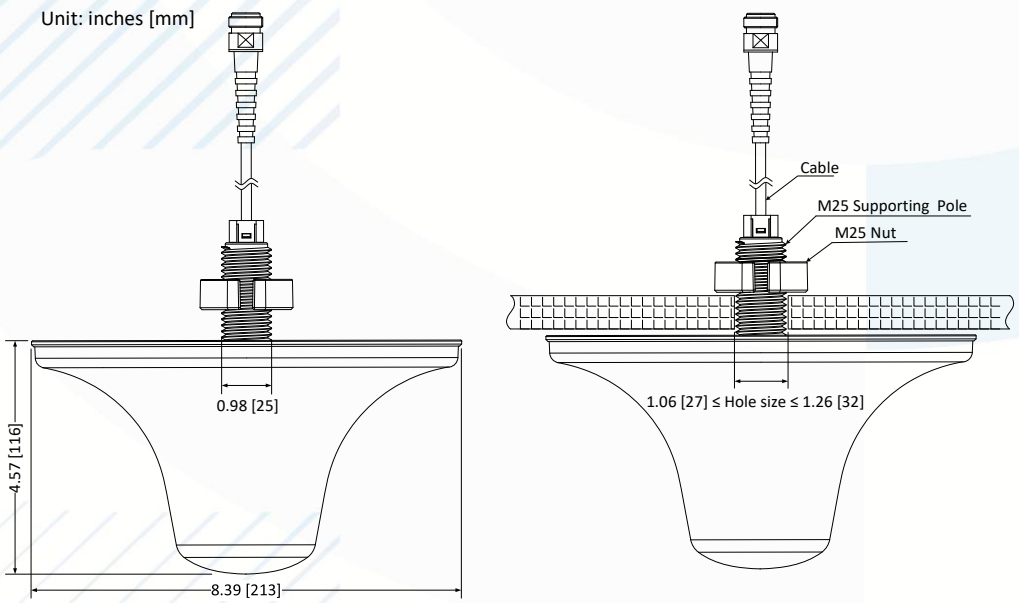


©2025 Comba Group. All rights reserved.
Information contained in this document is subject to confirmation at time of ordering.
Specifications may differ depending on region and customers' requirements.

2. Hard Ceiling Mounting

   Mounting Bracket: MT-DA-01. Please refer to MT-DA-01 Installation instruction



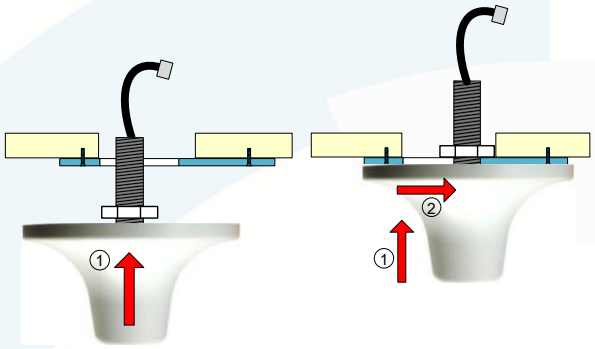


3. High Ceiling Mounting / Joist Mounting
   Mounting Bracket: MT-ND-HC. Please refer to MT-ND-HC Installation instruction

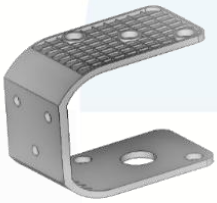

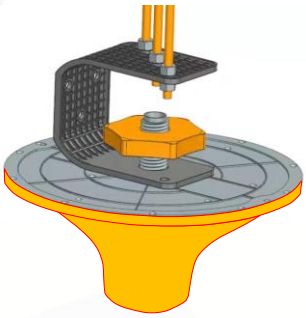

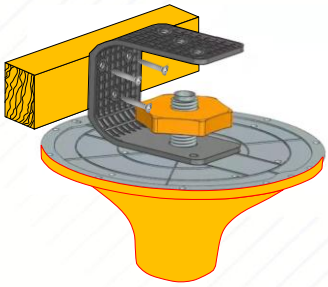

High Ceiling Mounting  Joist Mounting

©2025 Comba Group. All rights reserved.
Information contained in this document is subject to confirmation at time of ordering.
Specifications may differ depending on region and customers' requirements.